4ft Stretch Table Cover
(Zipper Back)

Bleeding area

Safe visible area

PMS 000c

Keep all important graphics inside the safe visible areas

All text & strokes must be outlined
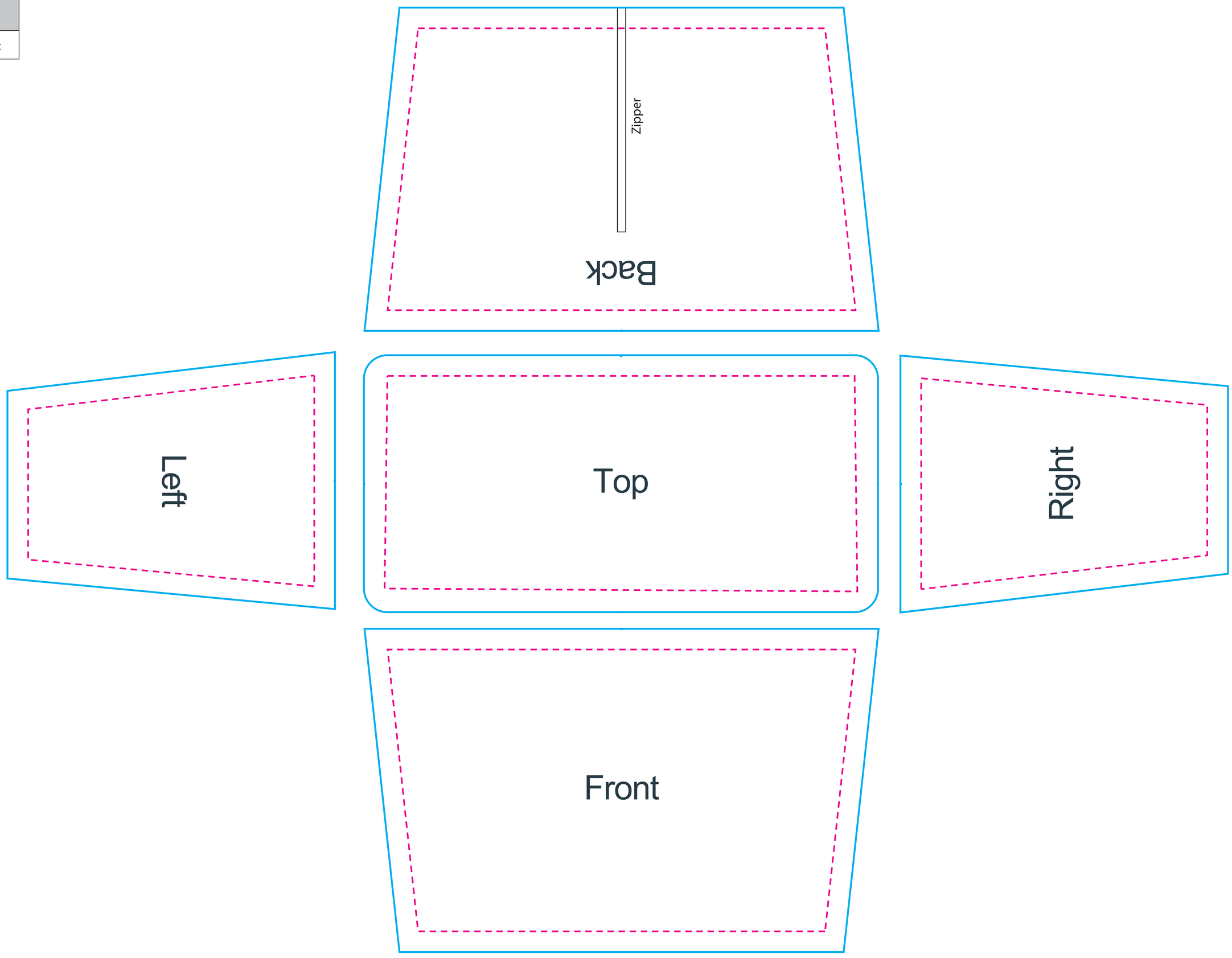
Any pixel-based artwork must be a minimum of 100dpi